FaPak®
Collection

WORKWEAR CARGO TROUSER
(Black)

Article No: 1175

Size	XS-5XL
Fabric	220gsm, 65% Polyester 35% Baumwolle
Care Label	60°
Carton Size	L:53 x W:37 x H:24 cm
Weight	GW: 9.00kg - NW: 7.85kg (Size L)
Carton Packing	16 Pcs.

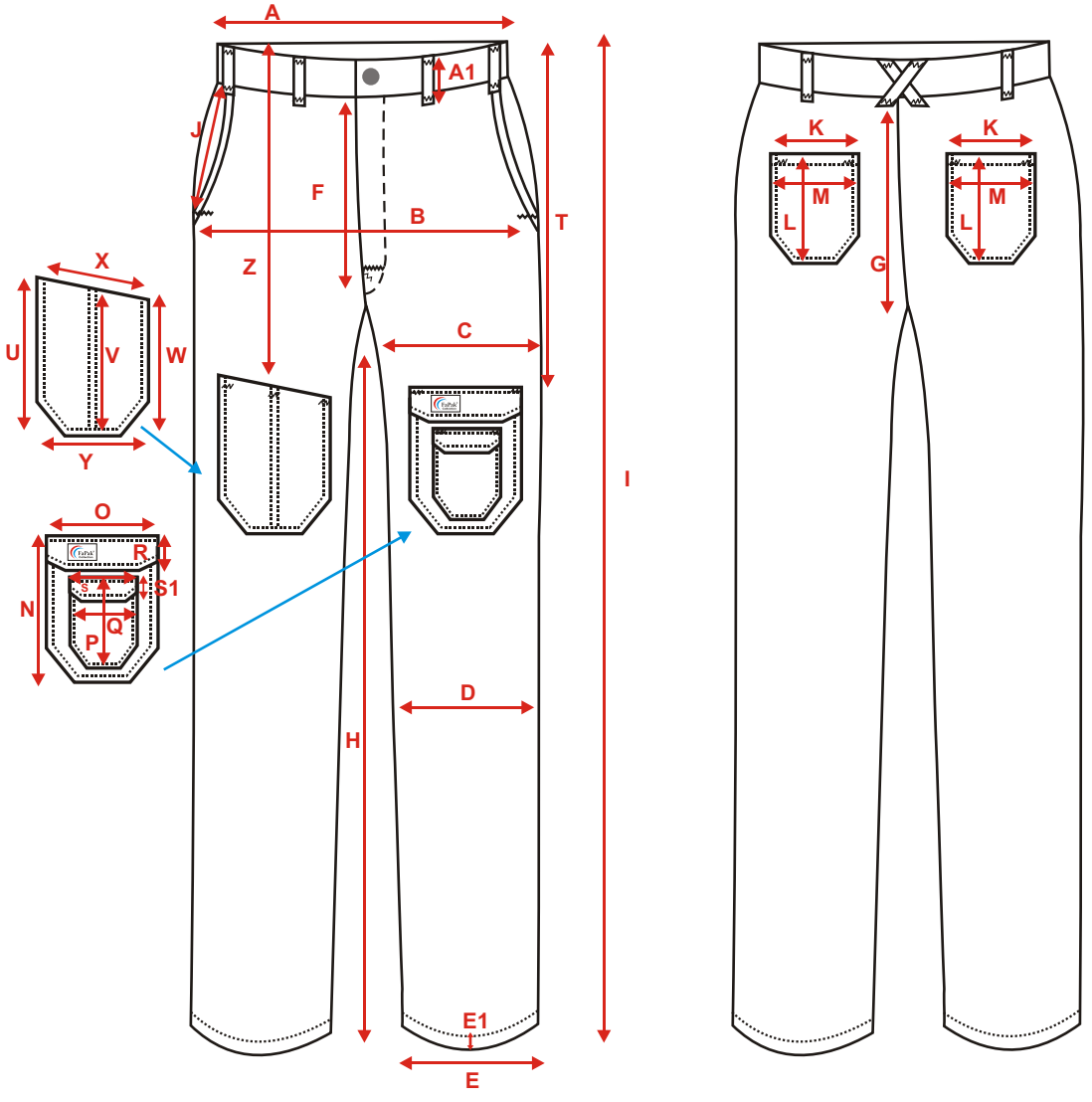

FaPak® Collection

M.S TEXTILEHANDEL E.K
SPECS SHEET M&S

ITEM: Work Wear Cargo Trouser (Black)
ALL MEASUREMENT IN CMS

ARTICLE 1175
Date: 16-03-2024

DESCRIPTION		XS	S	M	L	XL	2XL	3XL	4XL	5XL
WAIST	A	38	39	40	45	50	56	59	63	65
WAIST BAND HEIGHT	A1	4	4	4	4	4	4	4	4	4
HIP (20CM)	B	51	53	55	58.5	63	68	70	72	74
THIGHI	C	31	32	33	35	37	40	41	43	45
KNEE	D	24	25	25.5	26.5	27.5	30	30	30	30
LEG OPENING	E	22	22	22	23	23	23	23.5	23.5	23.5
LEG OPENING HEM	E1	2	2	2	2	2	2	2	2	2
FRONT RISE	F	26	27	28	30	31	32	33	34	35
BACK RISE	G	40	41	42	44	45	46	47	48	49
IN SEAM	H	77	81	82	84	86	86	86	86	86
BODY LENGTH	I	104	108	110	113	116	116	118	119	120
FRONT POCKET OPENING	J	16	16	17	17	17	17	17	17	17
BACK POCKET OPENING	K	13.5	13.5	13.5	14	14	14	14	14	14
BACK POCKET LENGTH	L	18	18	18	18	18	18	18	18	18
BACK POCKET WIDTH	M	16	16	16	16	16	16	16	16	16
LENGTH SIDE LEG POCKET WITH FLAP	N	21	21	21	21	21	21	21	21	21
WIDTH SIDE LEG POCKET WITH FLAP	O	17	17	17	17	17	17	17	17	17
Length Side Leg Small Pocket With Flap	P	16	16	16	16	16	16	16	16	16
Width Side Leg Small Pocket With Flap	Q	8.5	8.5	8.5	8.5	8.5	8.5	8.5	8.5	8.5
LENGTH SIDE LEG POCKET'S FLAP	R	6	6	6	6	6	6	6	6	6

FaPak® Collection

DESCRIPTION		XS	S	M	L	XL	2XL	3XL	4XL	5XL
WIDTH SIDE LEG POCKET'S FLAP	S	6	6	6	6	6	6	6	6	6
LENGTH SIDE LEG POCKET'S FLAP	S1	6	6	6	6	6	6	6	6	6
DISTANCE BETWEEN SIDE LEG POCKET FROM TOP OF FLAP TO TOP OF WAIST BAND	T	32	32	33	33	34	34	34	34	34
LENGTH SIDE LEG POCKET WITH OUT FLAP FROM TOP EDGE TO BOTTOM	U	20	20	20	20	20	20	20	20	20
LENGTH SIDE LEG POCKET WITH OUT FLAP FROM MIDDLE EDGE TO BOTTOM	V	21	21	21	21	21	21	21	21	21
LENGTH SIDE LEG POCKET WITH OUT FLAP FROM LOWER EDGE TO BOTTOM	W	16	16	16	16	16	16	16	16	16
ACROSS WIDTH SIDE LEG POCKET WITH OUT FLAP FROM TOP	X	16	16	16	16	16	16	16	16	16
WIDTH SIDE LEG POCKET WITH OUT FROM BOTTOM	Y	12	12	12	12	12	12	12	12	12
DISTANCE BETWEEN SIDE LEG POCKET WITH OUT FLAP FROM MID EDGE OF TOP OF WAIST BAND	Z	34	34	34	34	34	34	34	34	34